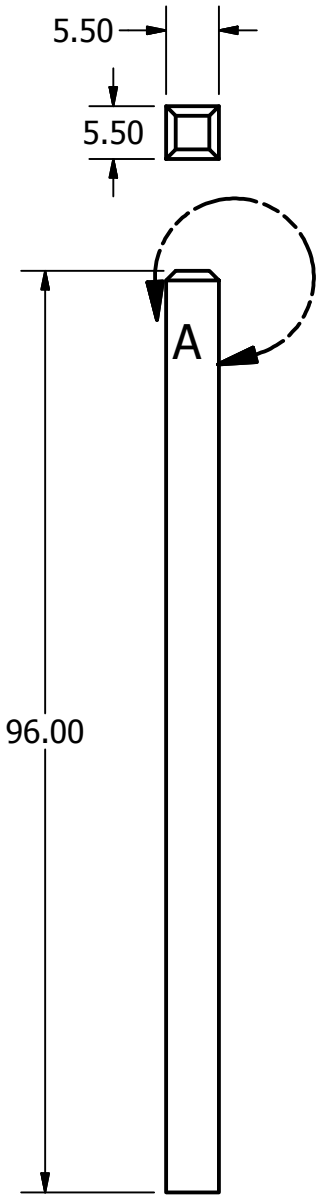

POST 1 REQ

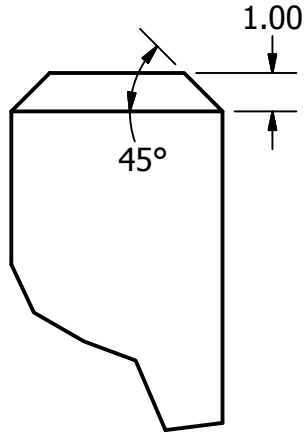

DETAIL A
SCALE 1 / 5

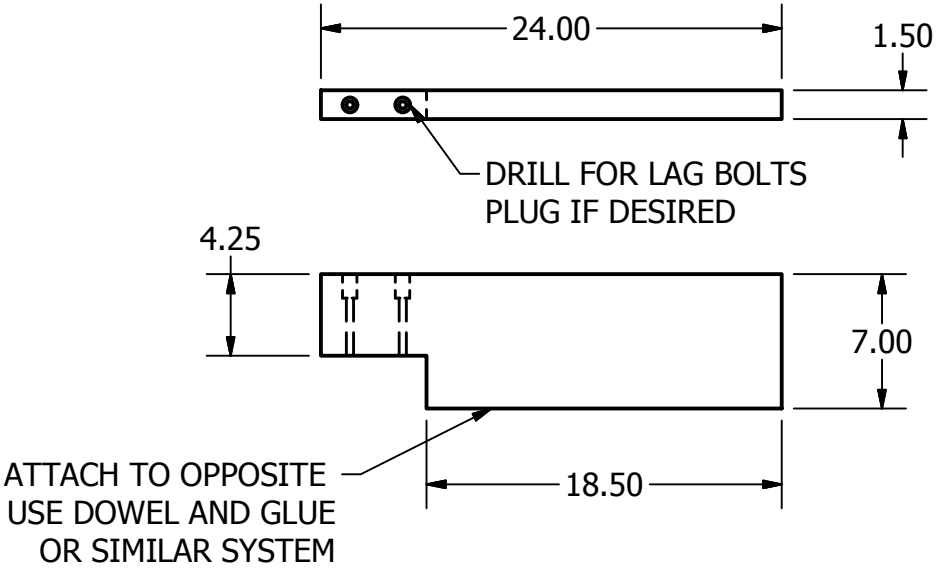

BOX TOP AND BOTTOM
4 REQUIRED

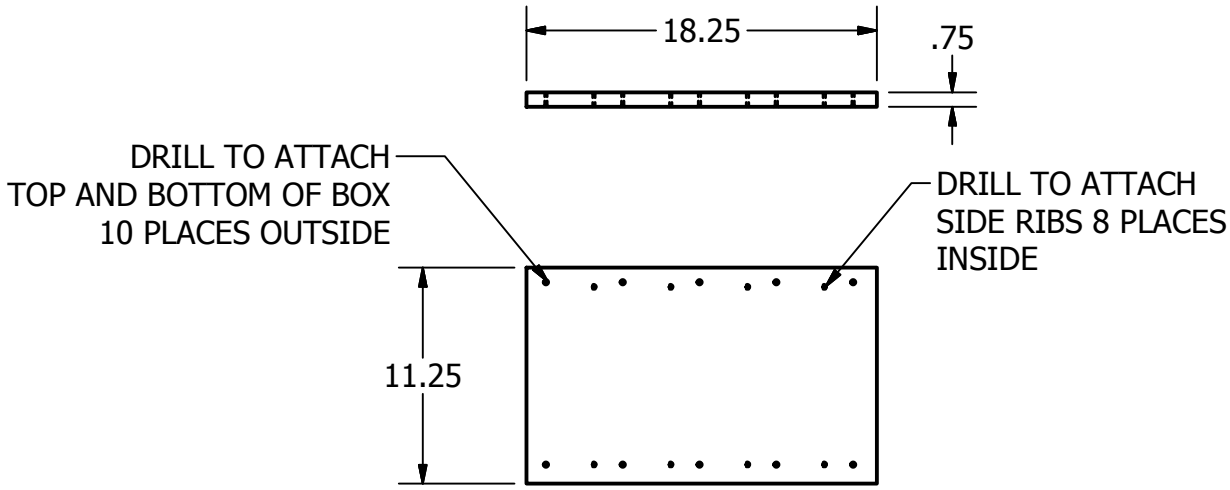

BOX SIDES
2 REQUIRED